Recent Progress of the Re-Entry Aerodynamics Research in Japan

JIRO KONDO, FUMIO TAMAKI,
RYUMA KAWAMURA
University of Tokyo

and GORO KAMIMOTO
University of Kyoto, Japan

SUMMARY

The object of the present paper is to describe the research activities on re-entry aerodynamics in recent years. As an introduction, the sounding rocket programme of the University of Tokyo is reviewed briefly. In the part of theoretical studies, (*a*) the optimum re-entry trajectory, (*b*) deformation of nose cone by sublimation, (*c*) supersonic base pressure, (*d*) quantum mechanics of dissociating gas, (*e*) non-equilibrium flow in the nose region of a blunt body and (*f*) coupling effects of radiation and dissociation in a stagnation-point flow are discussed. In the second part of the paper, experimental facilities and some results are described, namely (*a*) hypersonic wind tunnels, (*b*) gun tunnels, (*c*) ablation tunnel and (*d*) electro-magnetic shock tube are included. Finally, the problems which are remaining unsolved and the progress of the studies in the future are discussed. Some characteristics of the researches of re-entry are emphasised.

1. INTRODUCTION

On behalf of the Japanese Society for Aero/Space Sciences, we would like to pay our highest respect to the Royal Aeronautical Society which, this year, is celebrating the centennial anniversary of its founding. During the century since its establishment, the Society has achieved a great many brilliant accomplishments in both the theoretical and experimental fields of aeronautical research. At the same time it has produced many masterpieces of aircraft. In short, it has always played the part of the leader in the aeronautical sciences of the world.

It is a great honour and pleasure to be allowed to participate in the Fifth Congress of the International Council of the Aeronautical Sciences and to report on the progress of re-entry aerodynamics in Japan. Our lecture consists of three parts. We should like to describe, first, the present state of theoretical research in re-entry aerodynamics, and second, our experimental facilities and our future research plans as well as a few points of interest concerning re-entry aerodynamics.

We have in Japan a group of scientists who are interested in the theoretical and experimental researches of re-entry aerodynamics. Many of them are associated with universities while some are in research institutes or industries.

Although the research of re-entry problems is not requested urgently by rocket designers, our interest still lies in the aerodynamics related to re-entry since it does include a new field of aerodynamic science and contains various interesting issues in it. Our Ministry of Education gives the financial aid to the group of aerodynamic scientists to achieve a comprehensive research work on this re-entry problem. The present report is based chiefly on the results obtained by this research group.

Sounding rocket project

The sounding rocket project of the University of Tokyo in 1955 was to participate in the sounding rocket programme of the International Geographical Year 1957–58. The solid propellant two-stage rocket of Kappa–6 was used successfully in 1958 for the measurements of temperature and wind, cosmic-ray intensity and atmospheric pressure up to the altitude of 60 km (37 m). The project was continued after IGY and pushed forward to participate in the world synoptic rocket soundings programme of COSPAR during the International Quiet Sun Year 1964–65. The main effort of the University of Tokyo has been concentrated to develop powerful rocket systems, to construct the range facilities and to operate the firing. During the five years from 1960 to 1965, several sounding rocket systems have been completed.

Kappa–8L is the improved version of K–6, and its peak altitude is 170 km with 25 kg payload. It served for wind measurement by sodium vapour method and for geomagnetic measurement.

Kappa–8 with a booster of 420 mm diameter can climb to 200 km with 25 kg payload.

Kappa–9L is a three-stage rocket and its peak altitude is 350 km with 60 kg payload.

Lambda, a solid propellant booster has a diameter of 785 mm and can produce 40 ton thrust. It was completed in 1963 and the first flight of a three-stage rocket L–3, a combination of Lambda and Kappas took place in 1964.

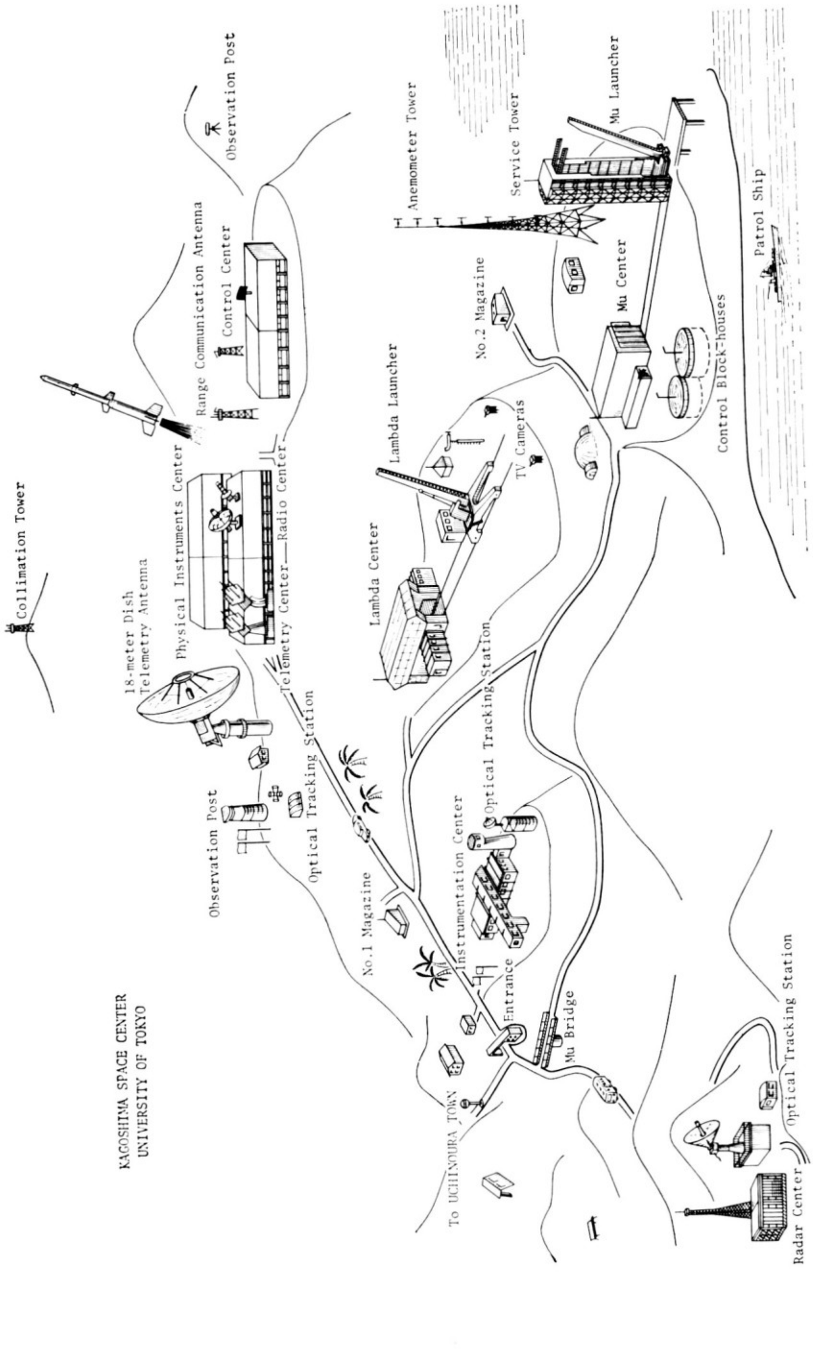

FIG. 1 — The general arrangement of Kagoshima Space Centre (University of Tokyo)

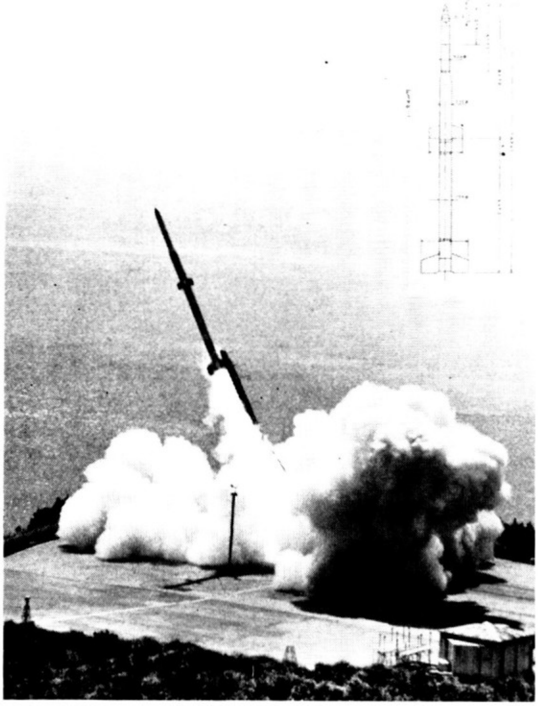

FIG. 2 — Lambda rocket

It succeeded in the scientific observations up to the altitude of 1100 km with 100 kg payload.

A small rocket for meteorological observation, named MT–135, has also been developed and used for wind and temperature measurement up to 60 km altitude.

Mu rocket is under development which is capable of launching a satellite into orbit. A big solid-propellant rocket motor M–1400, having a diameter of 1·4 m (4·6 ft) and producing a thrust of 100 tons (220,000 lb) is now in course of development.

Firings of rockets are carried out at Kagoshima Space Center, University of Tokyo, which is equipped with all the necessary facilities for launching, telemetry, radar and optical tracking, date acquisition, assembling and check out.

Figure 1 shows the general arrangement of the Kagoshima Space Center, located at the southern end of the Japanese islands. Fig. 2 indicates the dimensions of Lambda rocket and Figs. 3 and 4 give the maximum altitudes and the payloads attained by our sounding rockets during these five years.

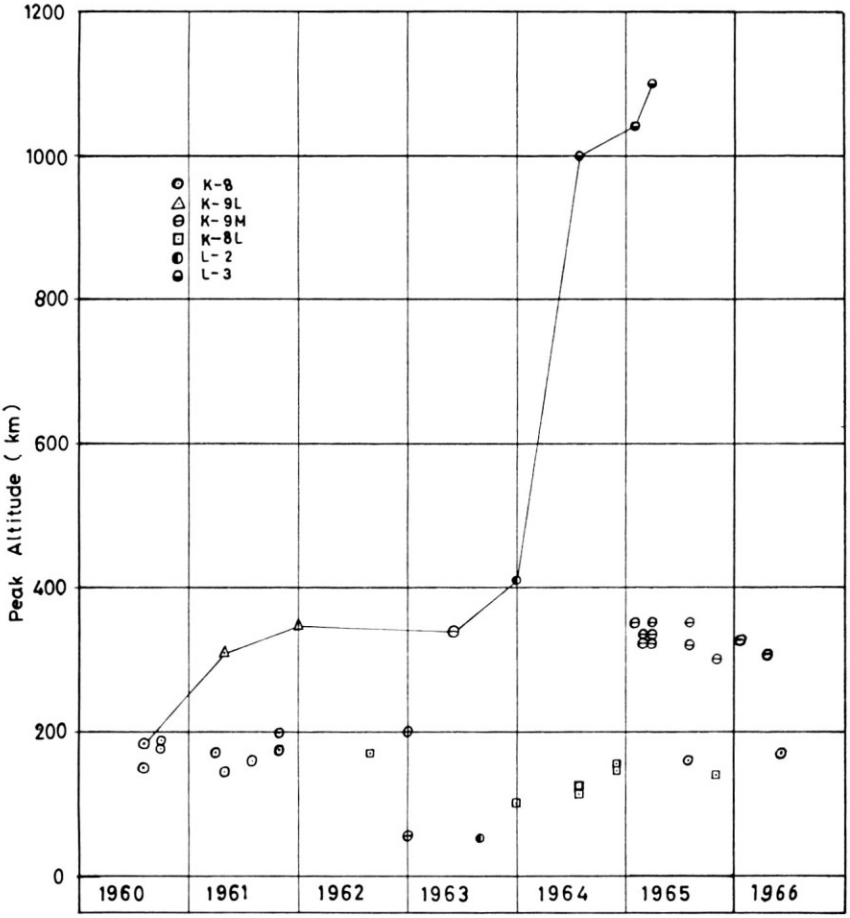

FIG. 3 — Maximum altitudes attained by the sounding rockets

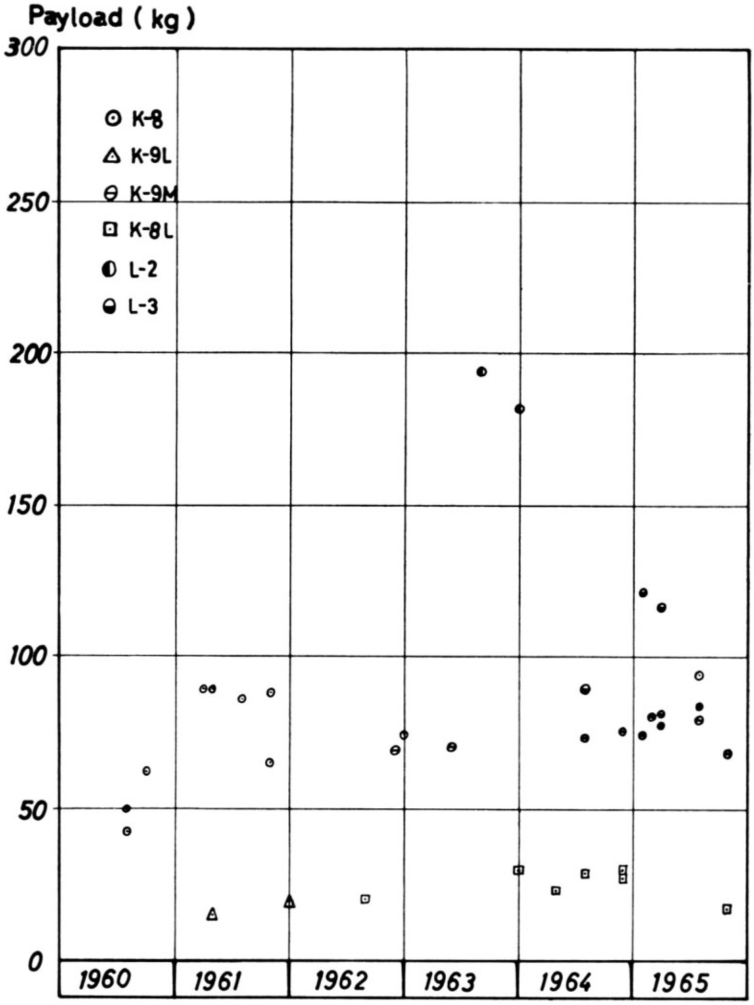

FIG. 4 — Payloads carried by the sounding rockets

SYMBOLS

a	velocity of sound
A_0	area of cross-section in barrel
A_R	area of cross-section in breach
E	total energy
h	Planck's constant
K_d	dissociation rate constant
K_d^j	dissociation rate constant from jth vibrational energy level
L_4	length of compression tube
M_{S1}	incident shock Mach number
p, P	pressure
P_D	air pressure for driving piston (taking into account finite volume of air chamber)
P_D^∞	air pressure for driving piston (assuming infinite volume of air chamber)
P_0	initial barrel pressure
P_R	initial breach pressure
r	radius vector from the centre of O_2 molecule
T	temperature
T_v	vibrational temperature
U_{P1}	piston velocity
u	velocity component normal to the uniform flow
v	velocity component parallel to the uniform flow
V	volume
V_{O_2}	intra-molecular potential of oxygen molecule
V_{int}	inter-molecular potential of oxygen and argon

α	non-dimensional dissociation rate based on the dissociation rate after the detached shock
θ	non-dimensional temperature based on the temperature after the detached shock
μ	reduced mass of argon
ρ	intra-molecular distance, density (Fig. 13)
σ_j	cross-section of dissociating molecule
σ_j/σ_0	normalised cross-section of dissociation based on the cross-section of zero level
τ	duration (Tables 1 and 2)
τ_w	distance from the shock to the wall in terms of optical thickness (Fig. 14)
ψ	wave function

Suffixes

1 initial condition of driven tube
2 condition behind incident shock wave
5 condition behind reflected shock wave
A initial condition in helium chamber
B final condition of helium gas compressed by piston
t stagnation condition
$*$ throat condition

2. THEORETICAL STUDIES ON RE-ENTRY AERODYNAMICS

The most important problem concerning re-entry aerodynamics is that of heat. The gas around the vehicle entering the atmosphere at an extremely high velocity, involves an enormous amount of total enthalpy and the real gas effects become very important in the analysis of the flow region. The surface of the nose cone is heated to a very high temperature, therefore some adequate precaution should be provided to protect the damage due to heat. Since it might cost a great deal to build experimental facilities to simulate the re-entry environment on the ground, theoretical studies are carried out to analyse the various aspects of the re-entry aerodynamics.

Optimum re-entry trajectory

The study of the optimum trajectory by controlling the angle of attack of a lifting vehicle is one of the most interesting problems concerning re-entry. The trajectory may be so determined as to restrict either the maximum heating rate at the stagnation point of the vehicle or the maximum acceleration during the re-entry flight in the earth's atmosphere. The optimum re-entry trajectory for the minimum total heat input during the re-entry is studied. Figure 5 indicates the typical results corresponding to the initial re-entry angle(1).

An approximate solution for the equation of motion of the lifting body is obtained which simplifies the numerical calculation of flight pass.

The aerodynamic characteristics of a particular shape of winged vehicle in a hypersonic flow are also studied.

Determination of the nose-cone by sublimating ablation

The utilisation of an evaporating or subliming material as the heat protection will be most effective since the most part of heat, transferred to the body, is absorbed as the latent heat associated with the phase change. The injection rate will be determined by the amount of heat flow and the heat

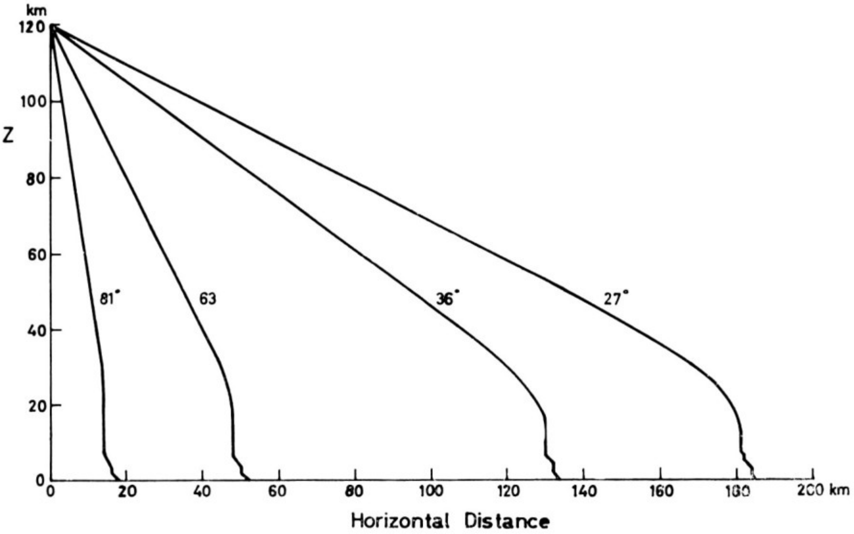

FIG. 5 — Optimum trajectories corresponding to various re-entry angles

transfer rate at a point on the body is influenced by the injection rate in the upstream of this point.

The general method of estimating the overall deformation of the nose-cone covered by a sublimating material is investigated, under the following basic assumptions:

The flow is laminar and the rate of deformation of the body is much smaller than the velocity of the flow, so that the flow is assumed to be quasi-steady while the boundary layer flow establishes very rapidly. The mass which sublimates from the surface is proportional to the heat transferred from the flow to the body.

Figure 6 shows a numerical example, starting from a spherical configura-

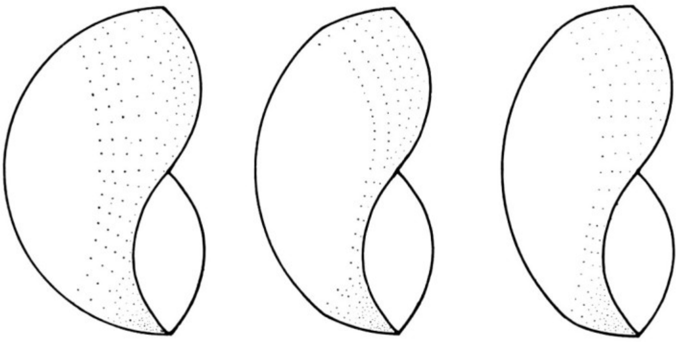

FIG. 6 — Deformation of the spherical nose-cone by sublimation

tion, the change in shape has been found for several cases. The erosion at the stagnation point is most remarkable since the heat transfer rate at the stagnation point is maximum on the surface and it decreases parabolically as the distance from that point increases(2).

Supersonic base pressure

We use, at present, the so-called blunt body with a flat frontal face, as a re-entry body. For the aerodynamics of such bodies of special configuration, the flow in the wake behind the body as well as the flow near the stagnation point is important. In Fig. 7 is shown an example of the study of the wake behind the flat plate(3).

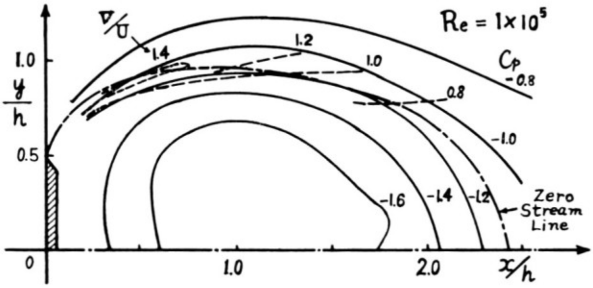

FIG. 7 — Flow behind a flat plate

Wind tunnel experiments were carried out on a two-dimensional body with a boat-tail, varying tail angle (0°–90°), Mach number (1·5–3·0) and Reynolds number ($0{\cdot}6-6{\cdot}0\times10^6$) to investigate supersonic base pressure problem. As far as the present experiment is concerned, the following results were obtained. By increasing the tail angle, the flow separates from the tail at the tail angle of less than 20° and the tail surface pressure varies little beyond it, and the flow deflection angle and pressure follow fairly well the Prandtl–Mayer relation before and after separation. The flow after separation is, on the time average, divided into dead water region and external flow by a streamline passing the corner of the boat-tail. A turbulent free jet develops around this separation streamline. Assuming that the velocity distribution of the free jet keeps a similar shape, flow velocity on the separation streamline can be determined. On the other hand, rear shock wave is generated around the intersecting point of the separation streamline and the symmetrical axis. If the total pressure on the separation streamline is higher than the pressure behind the shock wave, mass outflow occurs from the dead water to the region behind the shock wave, and mass inflow occurs when the case is contrary. Since either case contradicts the stationarity of the flow, the total pressure of the separation streamline must be equal to the pressure behind the shock wave. Using this condition and the free jet theory, the relation between Mach number and base pressure can be primarily obtained. The above theory seems to give a good agreement with the experimental results.

Quantum mechanical study on dissociation of gas

Many researches have been done to explain the real gas effects of air at the hypervelocity as well. The calculation considering the quantum mechanical mechanism of dissociation has been carried out to explain theoretically the characteristics of air at high temperatures. To investigate the dissociation of diatomic molecules at high temperature, the dissociation by vibrational excitation has been considered for the model of a collinear collision of an oxygen molecule with an argon atom as shown in Fig. 8.

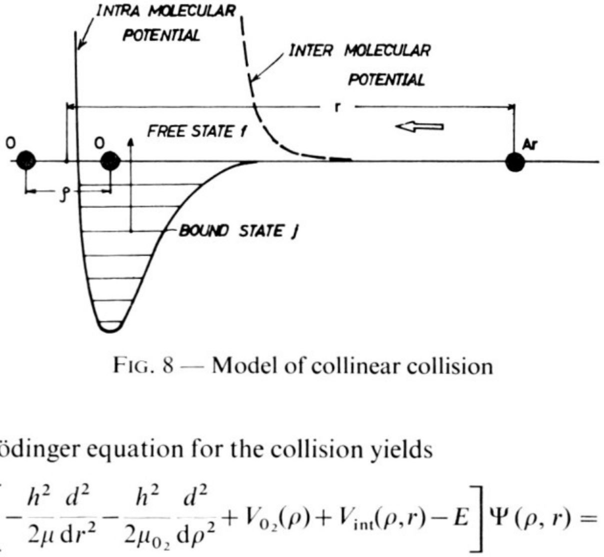

FIG. 8 — Model of collinear collision

The Schrödinger equation for the collision yields

$$\left[-\frac{h^2}{2\mu}\frac{d^2}{\mathrm{d}r^2}-\frac{h^2}{2\mu_{O_2}}\frac{d^2}{\mathrm{d}\rho^2}+V_{O_2}(\rho)+V_{\mathrm{int}}(\rho,r)-E\right]\Psi(\rho,r)=0$$

We may take the Morse potential for the intra-molecular potential V_{O_2} and a simple exponential potential for the inter-molecular potential V_{int}. The cross-section has been calculated by the Born approximation. The cross-section for the dissociation from jth vibrational level at sufficiently high energetic collision is indicated in Fig. 9, which indicates that the dissociation from the higher vibrational levels may take place more easily than from the lower levels. The dissociation rate constant K_d is given in Fig. 10. The temperature dependence of K_d shows a satisfactory agreement with the experimental data although the absolute value of $K_d=\Sigma_j\rho_j K_d^j$ is too large.

This may be caused by the application of the Born approximation and also by the inadequate assumption on potentials$^{(4)}$.

Non-equilibrium flow in the nose region of a blunt body

Behind the detached shock in front of the re-entry body, the temperature of the air is raised to the extremely high value and the real gas effect is involved.

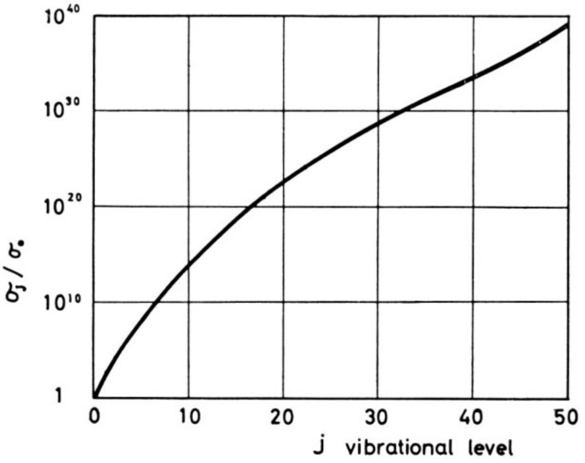

FIG. 9 — Cross-section for dissociation vs. vibrational level

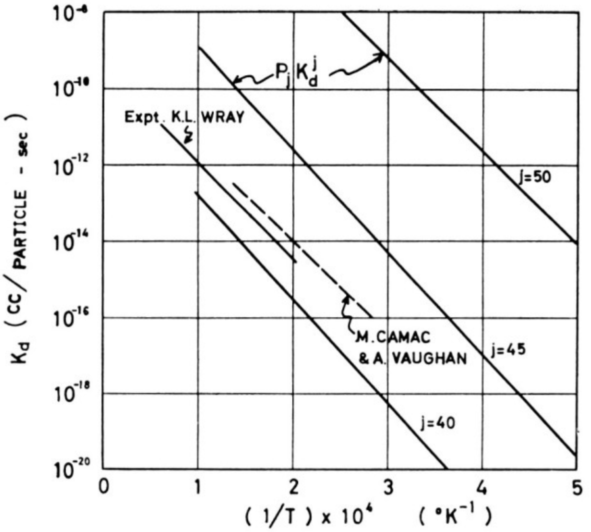

FIG. 10 — Dissociation rate constant vs. temperature

The internal energy of gas is activated at high enthalpy level, then dissociation of diatomic molecules and ionisation may take place in the flow field. It takes some finite time to reach the equilibrium state for this activated thermochemical process. The interaction between flow mechanisms and chemical processes should be considered, since it also takes a finite time for a group of gas molecules to be carried some distance by gas flow.

Exact numerical solutions have been obtained for inviscid nitrogen gas flows over a two-dimensional circular cylinder. Figs. 11 and 12 illustrate the comparison of the shock stand-off distance for an equilibrium and non-equilibrium flow of the same total enthalpy. There exists a great difference for the shock stand-off distance according to the level of non-equilibrium of the gas. The distance is decreased by the effect of non-equilibrium. Figure 13 shows the physical quantities of gas in the stagnation point flow region⁽⁵⁾.

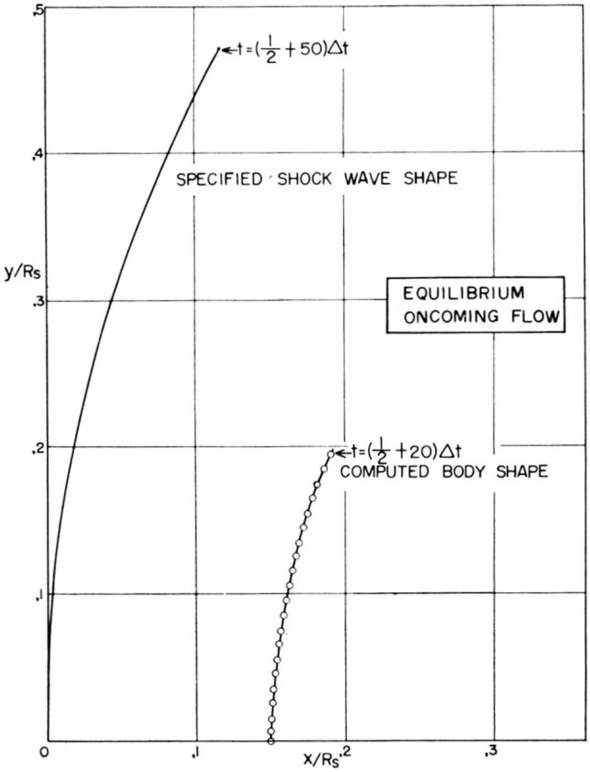

FIG. 11 — Bow shock and cylinder (equilibrium flow)

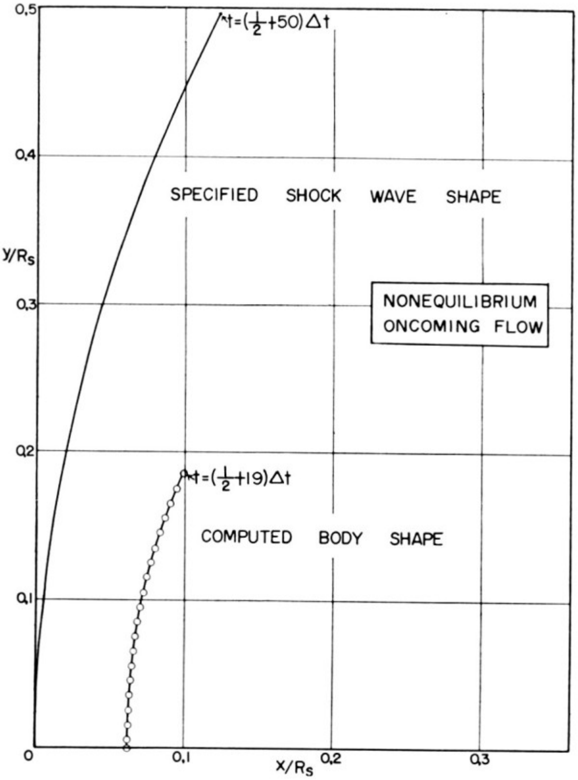

FIG. 12 — Bow shock and cylinder (non-equilibrium flow)

Effect of radiation and dissociation behind a strong shock wave

The hypervelocity of a space vehicle at a re-entry stage introduces complicated phenomena into the flow around the body. Behind a strong detached shock wave, the air may be raised to an extremely high temperature, the molecules of the air dissociate into atoms and the radiation energy of the hot gas is absorbed and emitted while the heat is transferred by conduction simultaneously. To estimate the total energy transfer at the stagnation point of the vehicle, the effects of radiation and dissociation should be considered in the hypersonic flow around the body.

When radiation is coupled with other modes of energy transfer, the energy conservation can be expressed in terms of integral differential equations since the energy is transported by radiation by means of electromagnetic waves while the heat conduction and convection are involved by contact between particles of matter. Thus, the radiative contribution to the total energy flux depends on the macroscopic configuration of the system, while the conduction

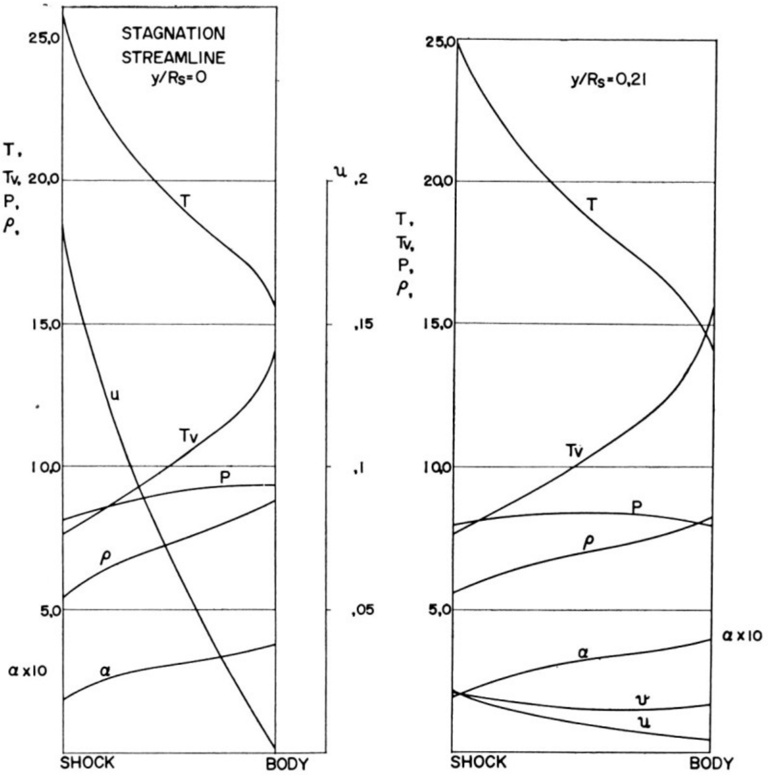

FIG. 13 — Change of physical properties in the stagnation flow region

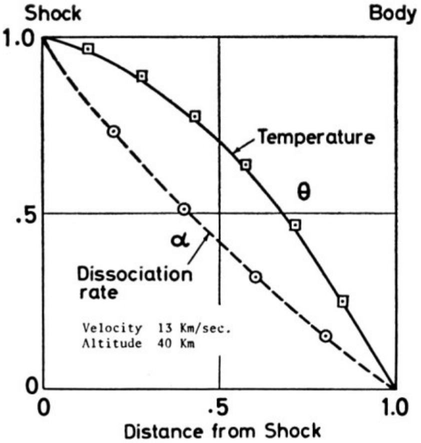

FIG. 14 — Temperature and dissociation rate distribution between shock wave and body ($\tau_w = 1$)

due to the microscopic situation can be expressed by derivatives of quantities expressing the state of the system.

A one-dimensional flow model is established for stagnation point flow between a strong shock wave and a body. Equations of continuity, momentum, together with that of energy furnish the system of fundamental equations for the problem. The method of steepest descent is applied to solve the energy equation. Temperature and atom fraction rate in a stagnation-point flow under the coupled influence of radiation, conduction and dissociation are obtained. Figure 14 shows one of the results$^{(6)}$.

3. EXPERIMENTAL FACILITIES AND SOME RESULTS OBTAINED

Next we will refer to the experimental facilities available for the re-entry studies in Japan. In our country hypersonic wind tunnels, shock tubes and

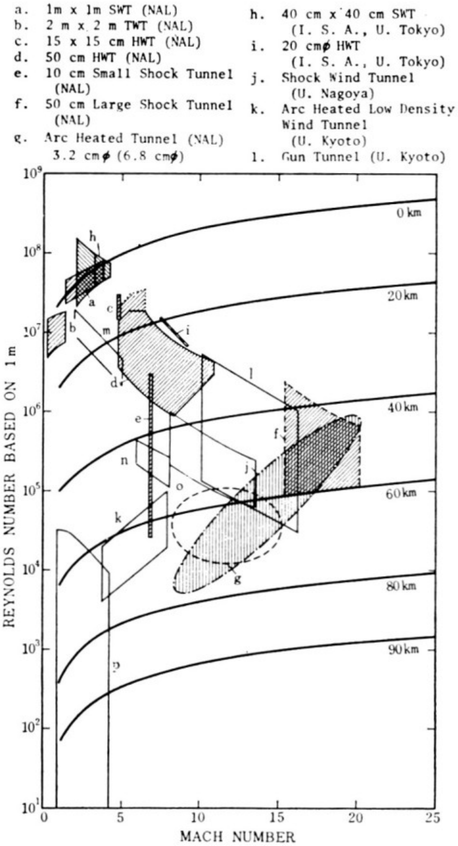

FIG. 15 — Range of simulation with respect to Mach number and Reynolds number

gun tunnels have been built in various universities and laboratories. Fig. 15 shows the range of simulation of these facilities with respect to altitude, Mach number and Reynolds number while Fig. 16 indicates the capabilities of the experimental facilities with respect to stagnation pressures and temperatures of re-entry bodies at several altitudes. These figures indicate that we have sufficient experimental equipment to cover almost all scope of re-entry. We will show the details of the principal facilities and their performances. We will also discuss some results obtained by these facilities.

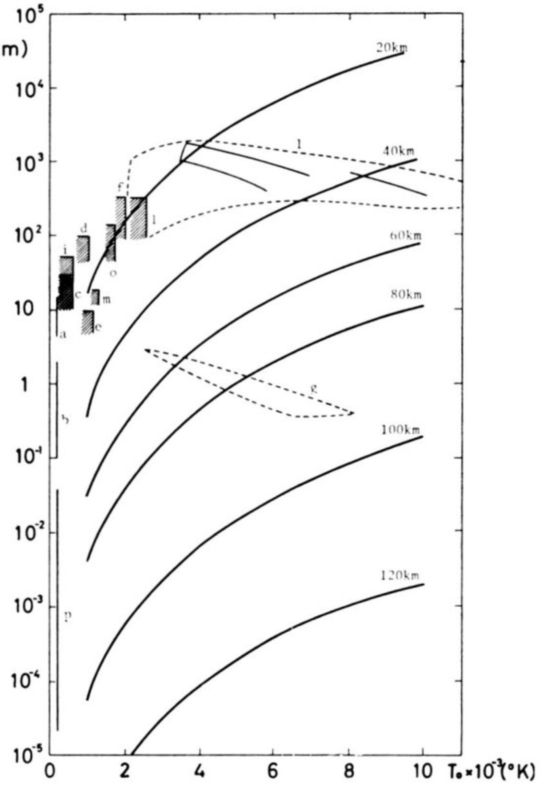

FIG. 16 — Range of simulation with respect to stagnation temperature and pressure

Hypersonic wind tunnels

Figures 17 and 18 show the arrangement of the hypersonic wind tunnel recently completed at the National Aerospace Laboratory. The diameter of

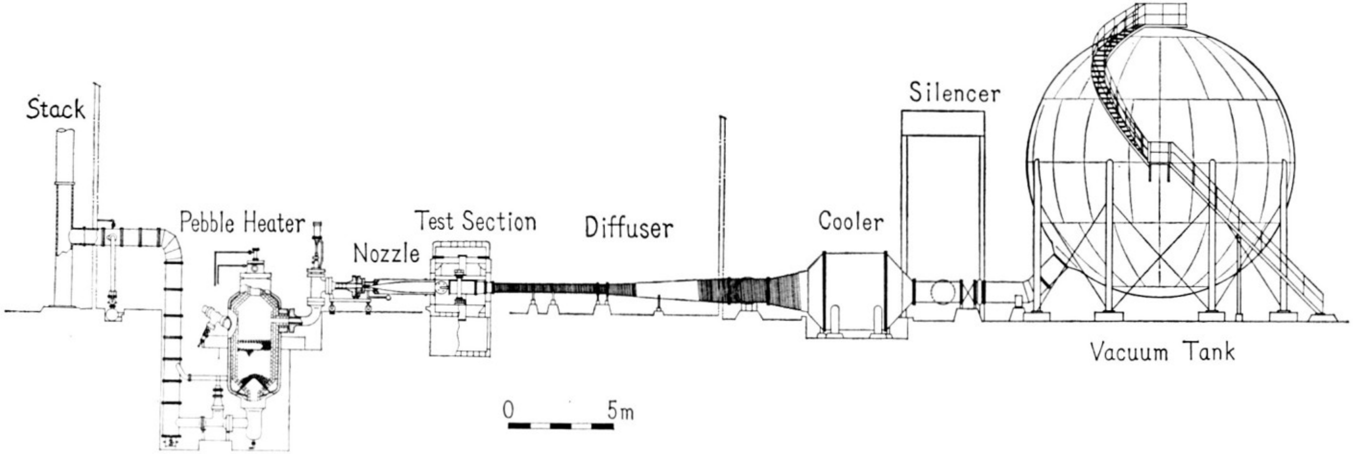

FIG. 17 — Hypersonic wind tunnel (N.A.L.)

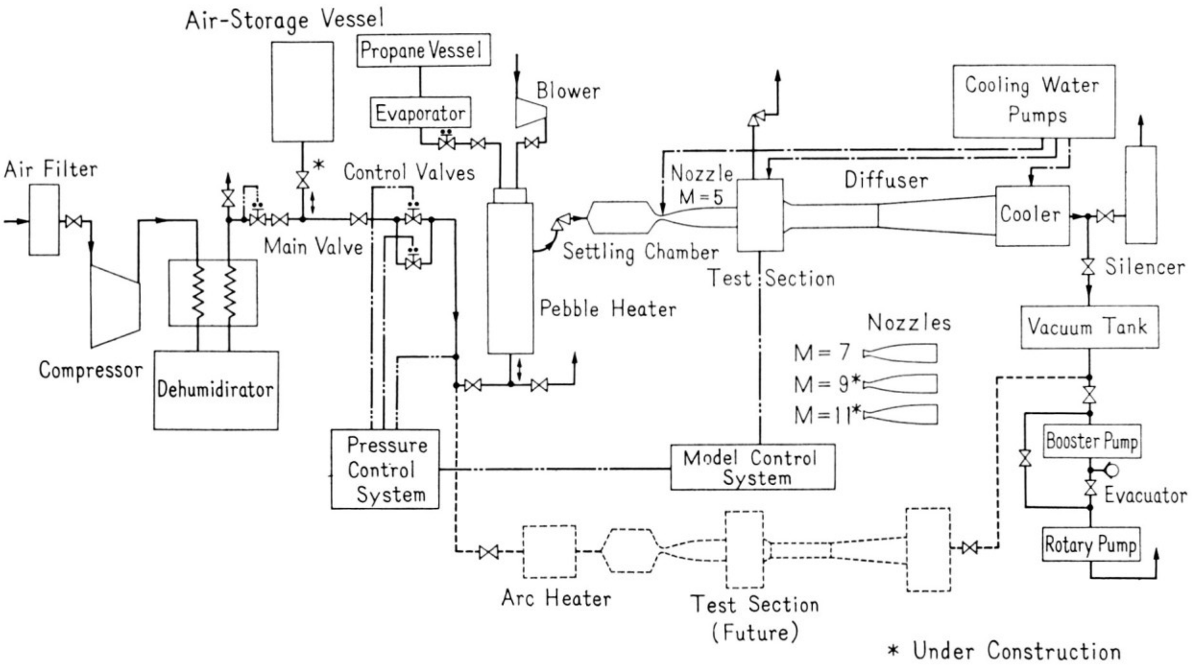

FIG. 18 — Block diagram of hypersonic wind tunnel (N.A.L.)

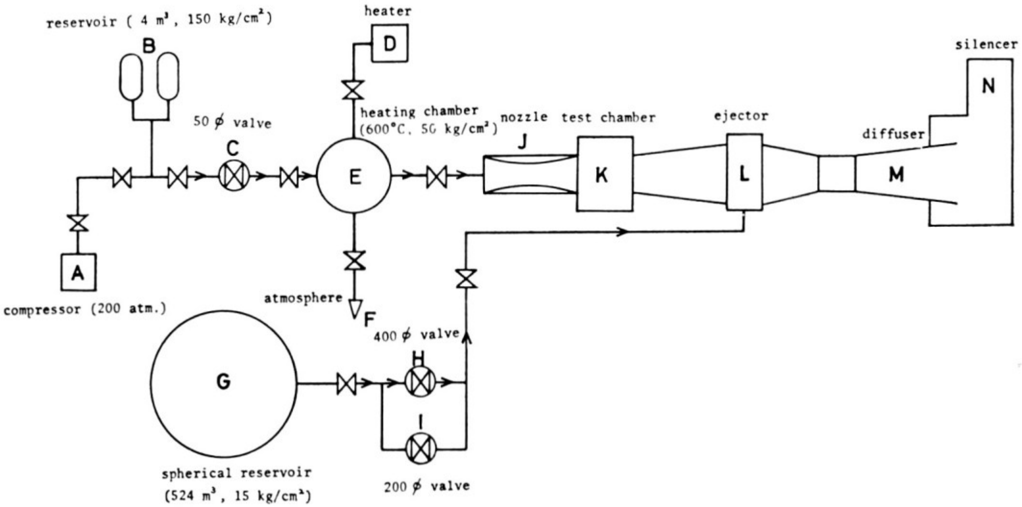

FIG. 19 — Hypersonic wind tunnel (University of Tokyo)

the test section is 500 mm (20 inches) and the operation time is 40–120 seconds at Mach numbers 5, 7, 9 and 11. This is the intermittent blow-down type tunnel in which the compressed air at 200 kg/cm^2, stored in a high pressure reservoir through a drier, is heated up to 1000°C by an alumina pebble heater and introduced in a test section. A model is supported by a string and a strut and its attitude can be changed according to a programme during the operation period. The air is finally discharged into the atmosphere through a silencer or restored in a large vacuum tank of 1150 m^3. This wind tunnel has just started operation and experiments on re-entry bodies are scheduled.

Figure 19 shows the general arrangement of the blow-down type hypersonic wind tunnel constructed at the Institute of Space and Aeronautical Science, University of Tokyo. The diameter of the test section is 200 mm (8 inches) and the flow duration is about 120 seconds at Mach numbers 7 and 8. Fig. 20 indicates the details of the test chamber.

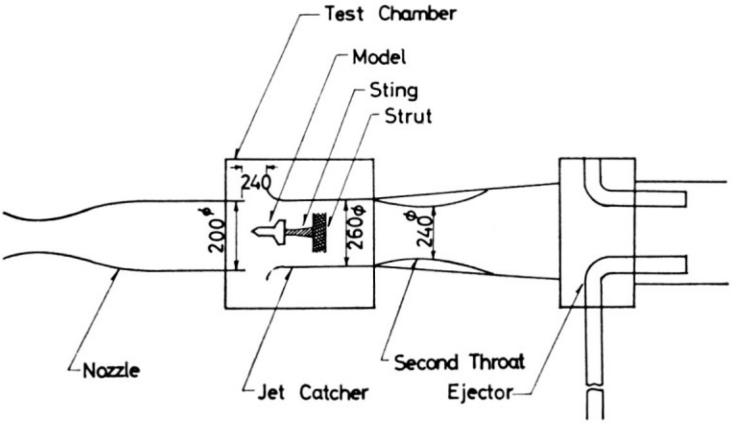

FIG. 20 — Test chamber of hypersonic wind tunnel

Figures 21 and 22 show some results obtained by this wind tunnel. As to the pressure distributions over a sphere for Mach numbers 7 and 8, the experimental results indicate a good agreement with the theory(7,8).

Gun tunnels

Gun tunnels are used as shock tubes to investigate real gas effects as well as conventional wind tunnels for hypersonic aerodynamics. Fig. 23 shows the block diagram of the large size gun tunnel which will be completed by March 1967 at the University of Kyoto. It can be used in two ways, namely either as a hypersonic gun tunnel driven by air or helium, or as a shock tube

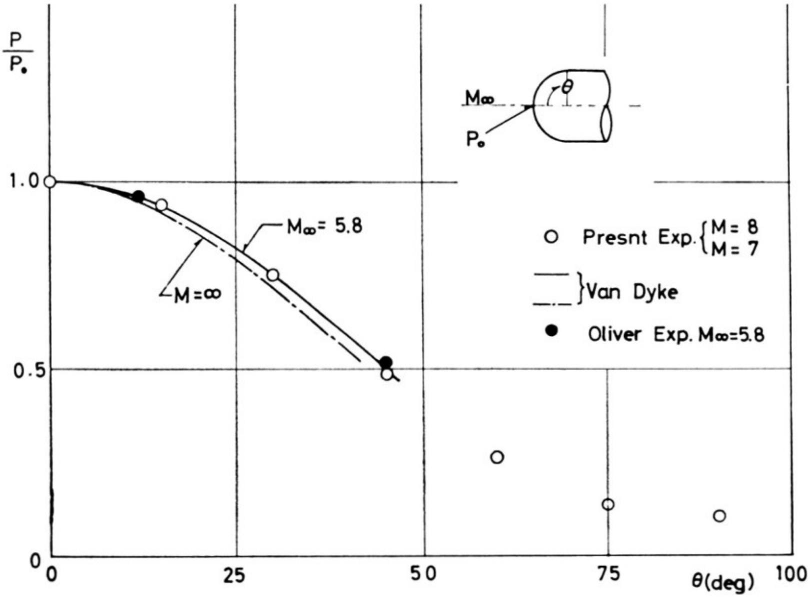

FIG. 21 — Surface pressure distribution on a semi-sphere at high Mach numbers

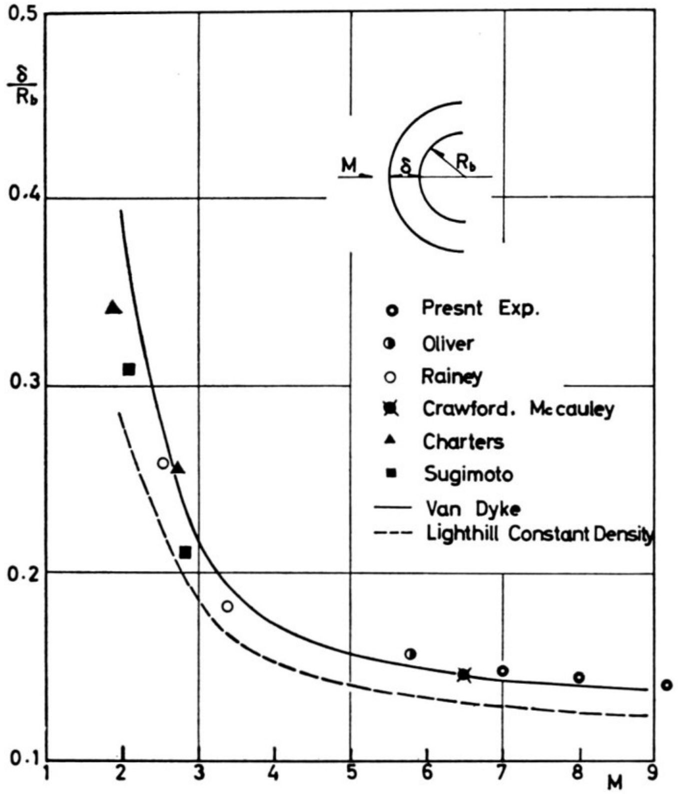

FIG. 22 — Stand-off distance of bow shock wave in front of a sphere for various Mach numbers

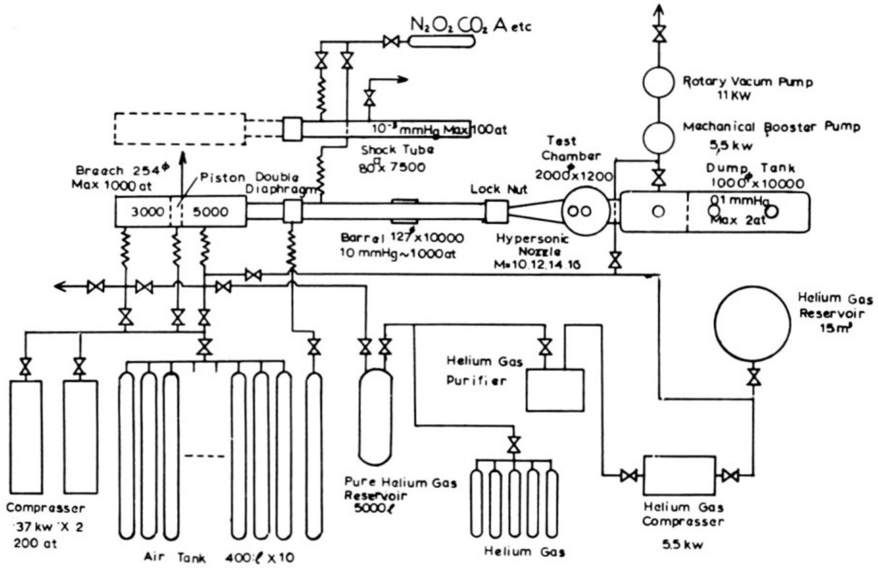

FIG. 23 — Block diagram of the gun tunnel (University of Kyoto)

driven by a piston. The performances of the tunnel are shown in Tables 1 and 2. Fig. 24 indicates the dimensions of the main parts of the pilot gun tunnel.

Figure 25 is the operation diagram when it is used as a piston-drive shock tube. The helium gas is compressed up to 1000 atm pressure at 3570°K by the movement of a heavy piston which is driven by a compressed air of 70 atm.

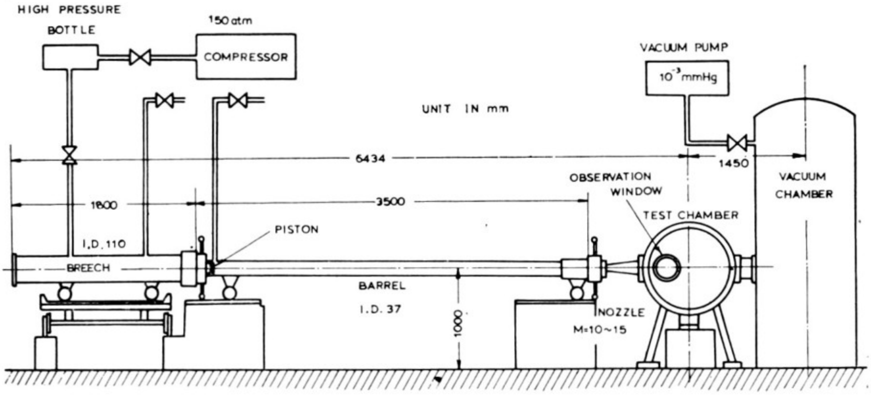

FIG. 24 — Dimensions of the main parts of the gun tunnel
(University of Kyoto)

TABLE 1

PERFORMANCE CHARACTERISTICS OF GUN TUNNEL WITHOUT PRE-HEAT

	Pressure ratio	*Area ratio*	*Stagnation pressure*	*Stagnation temperature*	*Duration*	*Incident shock Mach No.*	*Piston velocity*
	PR/P_0	AR/A_0	P_t/P_0	T_t/T_0	$\tau_{ms} \times A^* \text{cm}^2$	M_{S1}	$U_{p1}/a_{0\max}$
Air/Air	300	∞	350	8·3	34	2·97∼3·12	2·20
	150	∞	185	6·5	115	2·73∼2·87	1·97
He/Air	150	∞	400	8	58	4·65∼4·9	3·9

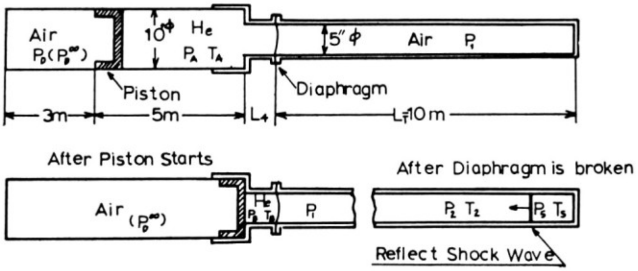

FIG. 25 — Operation of piston drive shock tube (University of Kyoto)

The shock Mach number will be 26 and the maximum temperature will be as high as 10,000°K. In Table 3, several important dimensions of the existing gun tunnels are compared(9,10). Fig. 26 shows the results of drag measurement, obtained in the pilot gun tunnel.

At the Institute of Space and Aeronautical Science, University of Tokyo, comparatively small gun tunnels are in use (Fig. 27). The dimensions of these tunnels are included in Table 3. The Mach number range is 8–14 and the duration period of the hypersonic flow is 100–200 millisec, while the diameter of the test section is 70 mm.

The drag measurement of blunt bodies were carried out in the pilot gun tunnel at Mach number 7·5. The drag of a cone with large vertex angle shows some discrepancy from the theoretical values obtained by the Newtonian flow theory while all the other data indicate a good agreement with the theory (Fig. 28). This point should be examined in detail. However, at the moment, we think that due to the curvature of the bow shock at the vertex of the cone, the assumptions of irrotational flow field might fail behind the shock wave, while the shock comes closer to the surface of the body when the

TABLE 2

PERFORMANCE CHARACTERISTICS OF PISTON DRIVE SHOCK TUBE

L_4	V_A/V_B	P_D^{∞}	P_D	P_A	P_B	T_B	M_S	$\overset{\text{max}}{P_1}$	P_2	T_2	P_5	T_5	τ
m		atm	atm	atm	atm	°K		mm Hg	atm	°K	atm	K	μ s
(0·25)	80	17·8	35·6	51·7	1000	5610	28	2·25	2·96	10100	50·	*	70
							26	5·15	6·06	9100	102·	*	80
0·50	40	33·8	67·6	2·08	1000	3570	26	0·26	0·31	8100	6·3	*	80
							24	1·16	1·16	7700	21·4	*	85
							22	4·27	3·57	7600	61·8	*	100
							20	11·6	7·96	7700	136·	12600	120
1·0	20	64·5	129·	6·45	1000	2250	20	1·01	0·69	6800	12·0	11700	120
							18	5·82	3·21	6800	49·8	10500	150
							16	22·7	9·73	6700	142·	9600	180
							14	75·2	24·9	6100	346	9500	240
1·5	15	89	178	11·0	1000	1820	14	37·8	12·6	5900	149	9000	240
							12	133	32·5	5050	360	8550	290
							10	422	70·0	4100	854	6900	330
(2·0)	10	100	200	16·4	787	1425	12	53·3	13·0	4900	147	7250	290
							10	204	33·8	4100	403	6900	330
							8	790	83·2	3150	680	5650	570

Note: $L_1 = 10\text{m}$ Initial gas temperature $= 300°\text{K}$

TABLE 3

PRINCIPAL DIMENSIONS OF GUN TUNNELS IN JAPAN

	Breech Chamber				*Barrel*			*Nozzle*		*Mach no.*
	Pressure atm	*Volume* l.	*Length* m	*Diameter* m	*Volume* l.	*Length* m	*Diameter* m	*Exit Dia.* m	*Semiangle degree*	
Pilot tunnel (Kyoto Univ.)	150	17	1·8	0·11	3·76	3·5	0·037	0·104	3° 45′	10–15
Gun tunnel (Kyoto Univ.)	200	253	5·0	0·254	127	10	0·127	0·300	3° 45′	10–16
Shock-gun tunnel (Nagoya Univ.)	200 (1000)	248	7·9 (2·6 + 5·3)	0·2	82	10·5 (0·4 + 10·1)	0·1	0·300	10°	8–20
Pilot tunnel (Tokyo Univ.)	30	9·5	1·5	0·09	2·1	3	0·03	0·05	7° 30′	6–8
Gun tunnel (Tokyo Univ.)	50–150	35	2·0	0·15	7·9	4	0·05	0·07	4°	8–14

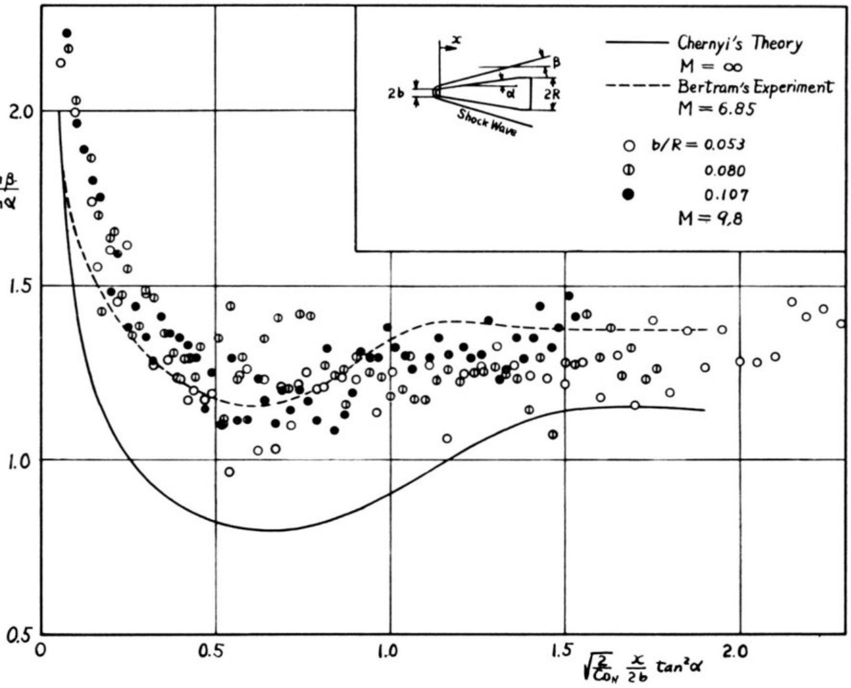

FIG. 26 — Drag coefficients for various blunted cones

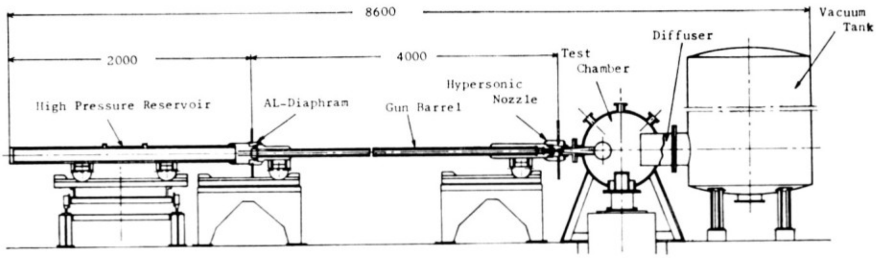

FIG. 27 — Gun tunnel (University of Tokyo)

shape of the nose is blunt, the assumptions of the Newtonian flow may hold in this narrow region between the shock and the body$^{(11)}$.

A free piston shock tube is used for high temperature flow study. The shock tube flow is observed by means of a streak interferometry for which a pulsed light of He–Ne gas laser is used in combination with a rotating drum camera. A uniform pulsed light is generated by an electric–mechanical shutter which

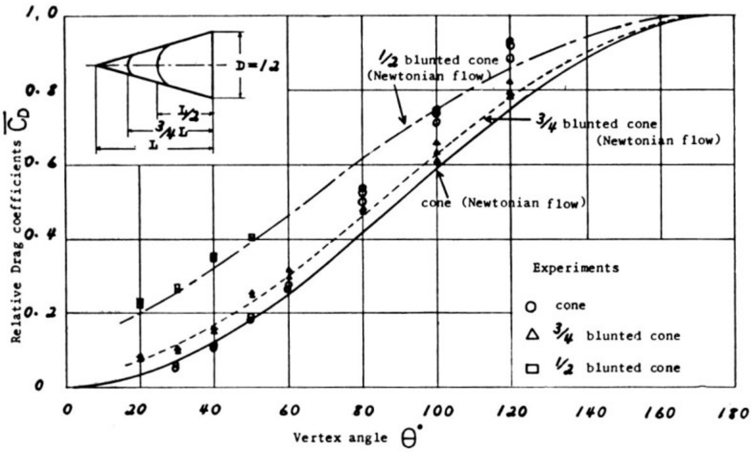

FIG. 28 — Relative drag coefficients for blunted cones

is driven by electric discharge. Fig. 29 is an example of the photography obtained for argon, when the initial pressure is 5 mm Hg and the shock Mach number 14. It can be seen that the high temperature flow behind the shock wave is comparatively uniform and nicely separated from the driver gas.

Ablation tunnel

Figure 30 illustrates an ablation tunnel at the Institute of Space and Aeronautical Science, University of Tokyo(12). The air is heated in an electric furnace at 1400°C (2700°F) before blown down through a conical nozzle of 50 mm in diameter. The stagnation temperature is 1200°C (2100°F) at Mach number 4·9. After passing through the test section, the air is ejected through a mechanical booster by a rotary pump.

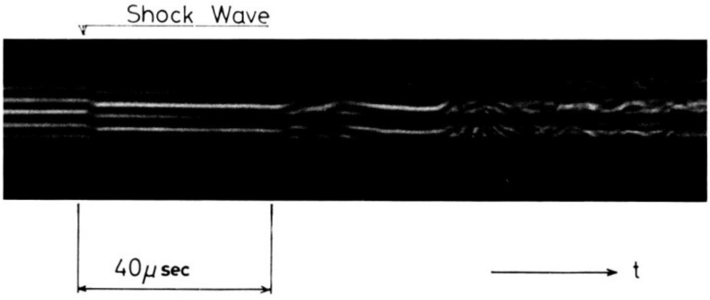

FIG. 29 — Streak interferometer of shock tube flow

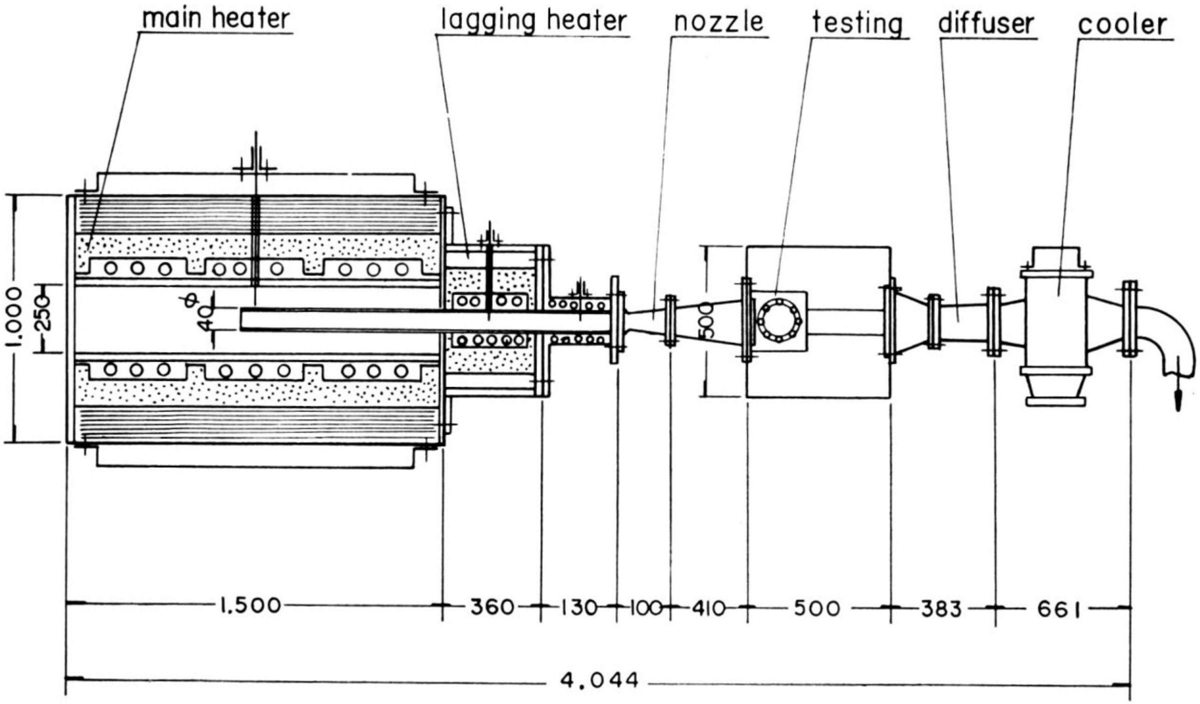

FIG. 30 — Ablation tunnel (University of Tokyo)

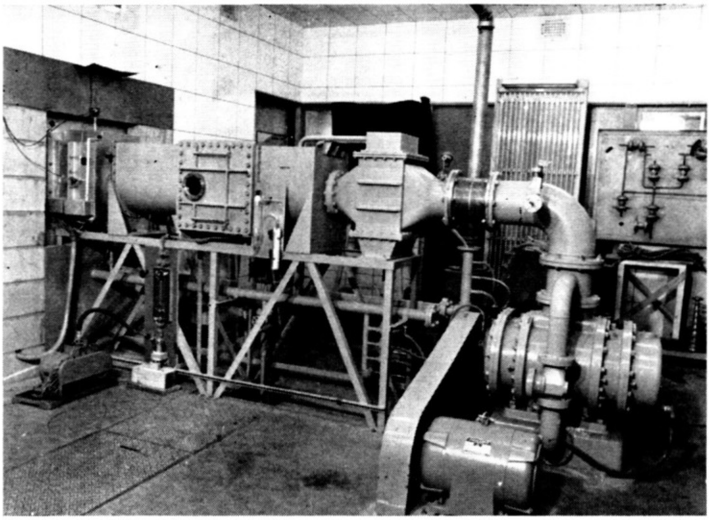

FIG. 31 — Ablation tunnel (University of Tokyo)

Figure 31 shows the general view of the tunnel. The electric heater is installed beyond the wall. The ablation of the blunt models of Teflon and other materials are being investigated.

Electro-magnetic shock tube

Figure 32 shows the general arrangement of the experiment. On the left-hand side of this picture, a conical electromagnetic shock tube is standing in which the model is installed. An electric condenser is located beside the bottom of the tube, and magnetic field is provided by this condenser. A Pirani gauge is seen on the table. A streak camera is at the right, off the picture, and only the lens of it can be seen.

The position of bow shock in front of a two-dimensional cylinder model, when magnetic field is applied, is recorded by the streak camera. Fig. 33 is an example of the record. The glow of gas behind the shock is pictured on the film through a slit, therefore the increase of the white band means the increase of the shock stand-off distance. The film is moved from right to left, and the horizontal line corresponds to the time axis.

The results of the experiment are shown in Fig. 34, which indicates that the shock stand-off distance is increased by the application of magnetic field to the model. There would be a possibility of decreasing the effect of radiation by applying magnetic field to the vehicle while there is little hope of lessening the aerodynamic heating by this method(13).

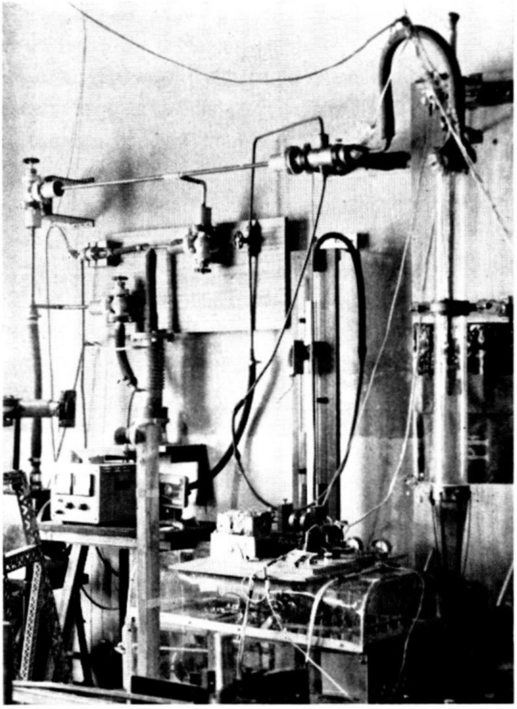

FIG. 32 — Electro-magnetic shock tube (University of Kyushu)

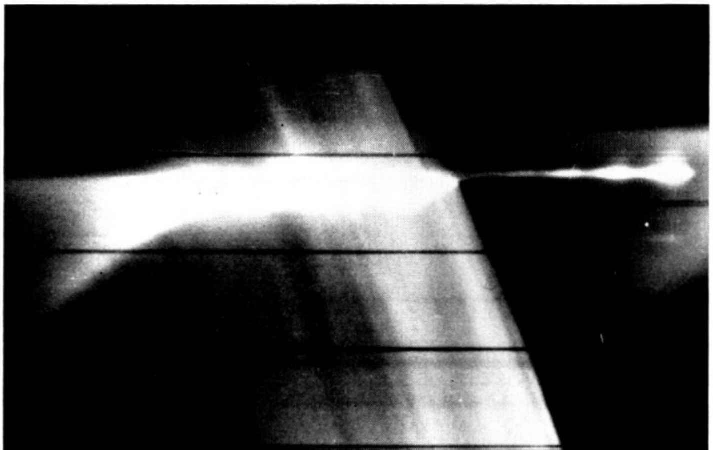

FIG. 33 — Record of streak camera

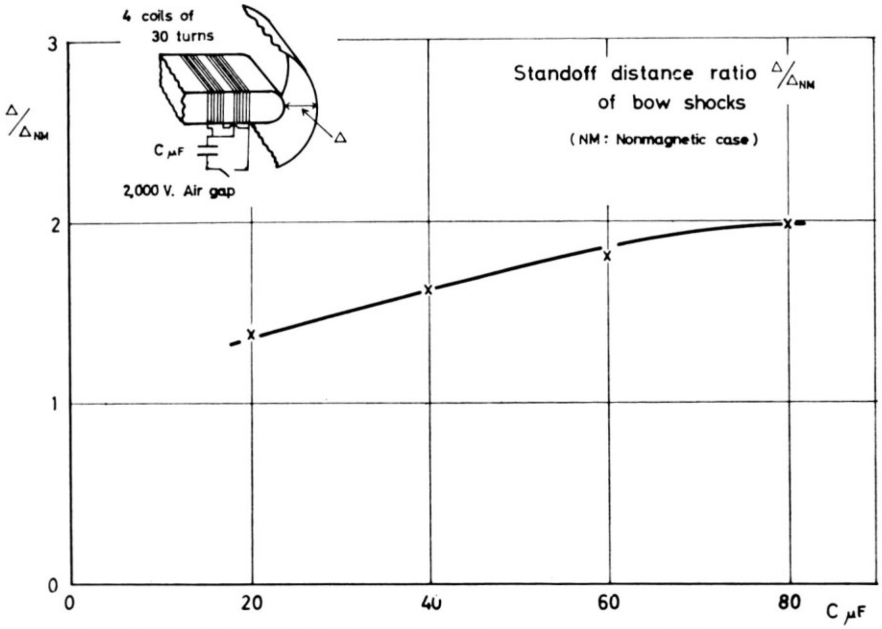

FIG. 34 — Variation of shock stand-off distance influenced by the electromagnetic field

4. CONCLUDING REMARKS

Although many efforts of researches have been accumulated on theoretical and experimental studies of re-entry aerodynamics, there are still many problems remaining unsolved. Aerodynamics of flight of a winged vehicle, its optimum configuration, physical or chemical properties of air and of materials at extremely high temperature, will be continued to be investigated. There are many experimental phenomena which cannot be explained adequately.

The hypersonic wind tunnel and the shock gun tunnel of large scale are ready to be used for exploring new fields of aerophysics and aerodynamics of vehicles.

We are expecting to answer many technical problems in the course of development of a space research project of Japan.

Finally, it should be added that these studies were not conducted under any governmental or other control, but freely by individual selection of subjects by aerodynamic scientists belonging to various universities.

Concluding the remarks this may be emphasised: though the aerodynamics of aeronautics and that of astronautics were first considered two different sciences, i.e., values such as velocity, density, pressure and temperature were thought to be fundamentally different in these two spheres of aerodynamics, our research on re-entry gradually proved a basic common feature between them. Airstream can be treated as continuum flow or as particle flow and studies from both sides are in progress. However, the problems directly related to re-entry have so far been treated in the case of the continuum flow and aerodynamic studies hitherto done are chiefly concerned with it. Aerodynamics of astronautics is not radically different from that of aeronautics, the former is rather the extension of the latter. It is interesting to notice that regarding re-entry flight, there is no fundamental difference between the aerodynamic characteristics of lifting vehicles and of aircraft.

We hope our present research can contribute to the progress of aeronautics in the world. We also wish to take this opportunity to wish The International Council of the Aeronautical Sciences continued success.

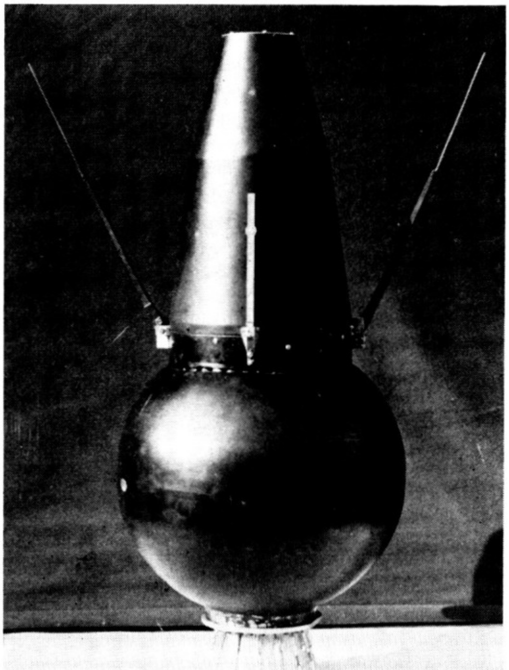

FIG. 35 — The Lambda rocket probe

SOME ADDITIONAL REMARKS

After we submitted the manuscript for this paper, our Lambda rocket achieved the high altitude flight of 1800 km on 23rd July, 1966, which is not included in Fig. 3.

Figure 35 indicates the probe with a spherical rocket which should be attached to a Lambda rocket and put into an orbit.

Figure 36 shows the general view of the launching site for a Mu rocket at Kagoshima Space Center of University of Tokyo.

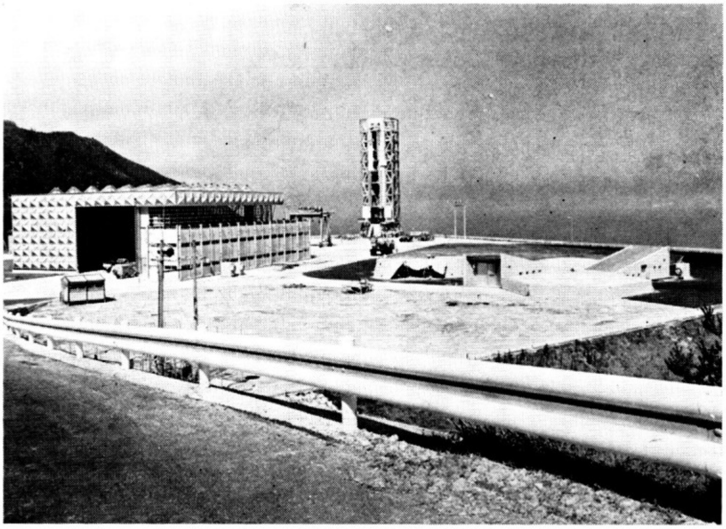

FIG. 36 — Mu launching site at Kagoshima Space Center

REFERENCES

References are restricted to the papers which are directly connected to the present paper.

(1) KONDO, J., 'Unsteady Aerodynamic Heating of a Winged Vehicle and Optimum Re-Entry Trajectory.' Proceedings of the Fourth Congress of International Council of the Aeronautical Sciences, Paris, 1964, pp. 843–73 (in English).

(2) KONDO, J., SATO, J., 'Deformation of the Nose Cone by Sublimating Ablation.' Transactions of the Japan Society for Aero/Space Sciences, **5,** No. 8, 1962, pp. 69–74 (in English).

(3) UCHIDA, S., 'A Contribution to the Analysis of Wake Initiation.' *Journal of the Japan Society for Aero/Space Sciences*, **13,** No. 139, pp. 237–41 (in Japanese).

(4) KOURA, K., 'Distribution of Oxygen Molecules by Vibrational Excitation.' *Journal of the Japan Society for Aero/Space Sciences*, **13,** No. 140, 1965, pp. 296–299 (in Japanese).
(5) AKI, T., 'Inviscid Non-Equilibrium Flows through the Nose Region of a Blunt Body.' *Journal of the Japan Society for Aero/Space Sciences*, **13,** No. 140, 1965, pp. 288–95 (in Japanese).
(6) KONDO, J., 'The Effect of Radiation and Dissociation behind a Strong Shock Wave.' Preprint of the Session B H of the Joint Meeting of the Physical Society of Japan and the American Physical Society in Honolulu, Hawaii, Sept. 1965 (in English).
(7) KAWAMURA, R., KARASHIMA, K., SEKI, K., 'Characteristics of the Blow-Down Type Hypersonic Wind Tunnel of Institute of Space and Aeronautical Science, University of Tokyo.' *Journal of the Japan Society for Aero/Space Sciences*, **13**, No. 139, 1965, pp. 251–7 (in Japanese).
(8) KAWAMURA, R. *et al.* 'Report on the Supersonic Aerodynamics Laboratory.' Bulletin of the Aeronautical Research Institute, University of Tokyo, **3,** No. 6 (B), 1963 (in Japanese).
(9) KAMIMOTO, G., 'A New Facility for Hypersonic Experiments.' *Journal of the Japan Society for Aero/Space Sciences*, **13,** No. 140, 1965, pp. 299–306 (in Japanese).
(10) KAMIMOTO, G., MORI, T., KIMURA, T., 'Performances Tests of the Kyoto University Hypersonic Gun Tunnel.' *Journal of the Japan Society for Aero/Space Sciences*, **11,** No. 117, 1963, pp. 306–10 (in Japanese).
(11) HINADA, M., 'Some Experiments on the Hypersonic Flow Utilizing a Gun Tunnel.' *Monthly Journal of the Institute of Industrial Science*, University of Tokyo, **17**, No. 10, Oct. 1965, p. 255 (in Japanese).
(12) OGUCHI, H. *et al.*, 'The Flow Survey for a Free Piston Shock Tube.' Bulletin of Institute of Space and Aeronautical Science, University of Tokyo, **2,** No. 2(A) (in Japanese).
(13) IMAHASHI, S., IWASAKI, M., 'Experiments on Shock Wave Velocities in the Conical Electro-Magnetic Shock Tube.' Technology Reports of The Kyushu University, **37,** No. 4, Jan. 1965 (in Japanese).

DISCUSSION

Dr. E. W. E. Rogers (Aero Division, National Physical Laboratory, Teddington, Middlesex, England): As someone concerned with hypersonic and re-entry aerodynamics research in the UK, I was very pleased to see the great progress made in Japan on this topic and the obvious enthusiasm that exists there. The work is obviously progressing rapidly and we look forward to many significant advances from the Japanese laboratories. I have two matters on which further information would be welcome. First, how is the research programme in this area devised and co-ordinated? Is there some central committee which selects problems and prevents duplication? Second, there seems to be little reference in the paper to low-density aerodynamics; rarefied-gas effects can be important in many very high-speed flight conditions. In Japan, Profs. Wada and Oguchi, among others, are active in this topic. How does their research fit into the general scene?

Dr. Kondo: We appreciate your kind comments on our work. It is a great pleasure for us to introduce some of our achievements on re-entry aerodynamics for those people of the world who are concerned about it.

The research group consists of about a dozen aerodynamicists, most of them are university professors and the others are connected with the Government research laboratories. The studies of the group are supported by the Ministry of Education, and we have obtained about £1700 per year as a group. Obviously, this amount is too small to build experimental facilities described in section 3 of our paper. However it is sufficient to support meetings of the group to discuss the use of facilities. There is not a strong control on our research from any authority. Each member can take up his subject according to his preference.

However the total number of aerodynamicists in Japan is not large, since there was a long vacancy of aeronautical activities after the War; and moreover the subjects of aerodynamics related with re-entry covers a wide range. Therefore, each individual needs to select a subject consciously not to overlap with others. We have a close contact and know each other quite well. At the beginning of each fiscal year, we used to meet to organise our individual research to be able to achieve the object of our project as a group.

Second, we know that the rarefied-gas dynamics is very important to understand the orbital flight situation of a space vehicle and some of our group are also very interested in this field of aerodynamics. Professor H. Oguchi is a member of our group and he takes a part of our co-ordinated research. However, the most difficult aerodynamic problems associated with the re-entry stage of a vehicle occur in the comparatively low altitude where the density of air is dense, rather than in the upper atmosphere. Therefore we restricted ourselves for the present paper not to include the rarefied-gas effect and low density experimental facilities.